filterfit

engineered filtration solutions

Liquid Filtration

Engineered filtration solutions

Filterfit manufactures and provides a wide range of filtration solutions to suit the industrial, commercial and medical industries

Air filters & services

- Bulk media & cut pads
- Roll filters
- Panels & frames
- Deep bed filters
- Carbon filters
- Cartridge filters
- Mist eliminators
- HEPA filters
- ULPA filters
- Terminal HEPA modules
- Electrostatic filters
- HEPA certification
- Cleanroom validation
- Duct & coil cleaning
- Kitchen canopy cleaning
- Installation
- Industrial cleaning
- Preventative maintenance

Industrial dust filtration

- Cartridges: pleated paper and non-wovens
- Dust bags: to suit all types of dust collectors
- Flexible transitions: for all dry powder applications
- Nylons: sieving fabrics
- Milling accessories: sifter pads, balls & brushes
- Filtration hardware: cages, clamps, venturis, gauges
- Laboratory analysis: media testing
- Preventative maintenance: dust collector inspections & reports

Solid liquid separation

- Vessel housing & bags
- Micron-rated monofilament cloths
- Calibrated needlefelts
- Filter cartridges
- Filter press cloths
- Rotary vacuum drum cloths
- Disc filter bags
- Filter belts
- Centrifuge bags

Through our business units, we manufacture, service and supply all types of chemical, air, dust, liquid filters & systems. Our combined filtration experience of over 50 years will ensure filtration solutions with the best performance.

filterfit
engineered filtration solutions

Due to on-going product development, Filterfit reserves the right to change design and specifications without notice

Index

Why filter liquids

The reasons for liquid filtration are many and varied.

Product quality/standardisation

To ensure that a finished or delivered product is free from all possible contaminants and provide a consistently clean supply.

Pollution control

To remove potentially hazardous solids or liquids from a waste stream prior to discharge back into the environment.

Equipment protection

To aid in prolonging of equipment life such as pumps, engines, hydraulic equipment, heating and cooling coils.

Recycling

Process water in food manufacturing plants, vehicle wash bays, separation of solids from chemicals for re-use.

Filterfit supplies a range of both industry standard and non standard liquid filter solutions across a large industry sector. Some but not all products are shown within this manual. Should the item you are seeking not be shown here, please contact our office for assistance from one of our technical sales staff.

Due to on-going product development, Filterfit reserves the right to change design and specifications without notice

Rotary vacuum disc filters

A rotary vacuum disc filter is designed to separate liquids from solids for de-watering purpose. The primary industries where disc filters are used are pulp and paper and mining.

Process and operation

Using a continuous filtration process, disc filters have one huge advantage over other filter designs in that they offer a much larger filter area per unit of floor area.

This smaller footprint makes disc filters particularly suited for the processing of bulk products on filter floors as found in alumina refineries, coal preparation plants, pulp and paper processing and so on.

The basic principal construction of a disc filter is that a number of filter discs are mounted parallel to one another on a horizontal shaft. Each disc is made up of interchangeable sectors covered by an individual filter cloth. Individual sectors can be removed independently so that filter cloths can be replaced as required.

During operation, the shaft rotates which in turn, rotates the discs through a sump into which a slurry is fed. A vacuum is applied to the disc sectors via pipes running through the core of the shaft, along which the filtrate is also removed. Cake collects on the submerged part of each sector, and is removed from the slurry suspension as the disc rotates. The final part of the cycle removes the cake into a collection trough by both scraper blade and snap blow before the cycle is repeated.

Disc sector filter cloths

Filterfit disc filter cloths are designed to give long life, great cake release and low cake moisture content. Both woven and non-woven (needlefelt) fabrics are available in a range of synthetic fibres to withstand aggressive chemicals, high temperatures and abrasive slurries.

Of course, they can be custom manufactured to fit any disc sector encountered in the market place. Zip or Velcro enclosures can also be added upon request.

Due to on-going product development, Filterfit reserves the right to change design and specifications without notice

Rotary vacuum drum filters

Rotary vacuum drum filters (RVDF) are one of the oldest filters used for industrial liquid / solids separation.

As a basic separation process, drum filters are used in a wide range of industries and applications.

Dewatering slurries of pulp, food products, mining products, waste water and even wine are very common uses for drum filters.

The primary advantage of drum filters is that they utilise a continuous filtration process rather than a batch filtration process, as seen with filter presses. They are also comparatively simple with few moving parts and are automatic in operation, so costs are low.

The primary disadvantage of drum filters is that the cake produced is of a comparatively high moisture content, however this is not often an issue, especially if further downstream treatment of the cake is necessary.

A rotary vacuum drum filter consists of a large rotating drum covered by a filter cloth. The drum is suspended on a shaft over a trough containing a slurry. Approximately 50% of the drum screen area is immersed in the slurry.

As the drum rotates into the trough, slurry is sucked onto the surface of the filter cloth forming a cake due to the drum being under constant vacuum. Filtrate is removed from the inside of the drum continuously and usually re-circulated into the system (unless it is collected, such as in wine-making).

As cake is picked up and rotated out of the trough, it will be continuously dried until reaching the cake take off point. The cake will then be removed automatically by a scraper blade or similar process for collection. As well as scraper blade discharge, other methods are sometimes used: belt discharge, roller discharge and string discharge.

As mentioned, drum filters utilise continuous filtration, whereby solids are separated from liquids through a filter medium / cloth using vacuum. The filter cloth itself is one of the most important components of the filter and is typically made from woven synthetic fabrics. The choice of filter cloth type has a direct influence on the overall performance of the filter.

Filterfit supplies precision woven drum filter cloths and covers (roll, scraper, string and belt) are available to fit any size drum filter and any configuration.

Our drum filter fabrics are available in all common and uncommon polymers in use today. Drum filter fabrics provide great cake formation, filtrate drainage and cake release. Their long cloth life ensures less maintenance downtime and costs.

Due to on-going product development, Filterfit reserves the right to change design and specifications without notice

Horizontal vacuum belt filters and belt filters

Belt filters are used in a wide range of industries for solid / liquid separation processes. They are particularly common in mining, chemical plants and for waste water treatment.

One main advantage of belt presses over other filtration processes such as filter presses, is that they utilise a continuous filtration process, rather than a batch filtration process as seen with filter presses for example. This equates to high product throughput.

The filtration process is achieved by either squeezing a sludge between two filter belts under pressure as with a belt filter, or by the use of vacuum underneath one single belt as with a horizontal vacuum belt filter. Of course the selection of the correct filter belt or filter cloth is critical for the optimum operating efficiency of the filter/process.

In short, belt filters take a slurry or sludge as a feed and separate the liquid or filtrate, and the particles into a solid cake.

Filter belt/cloths

Filterfit is able to supply filter belts/cloths for all brands of belt filters, and in a range of filter fabric polymers and weave styles. Either woven or spiral belts are readily available, with a variety of seam types available to industry – clipper, endless spliced, pin and sewn seams.

Filterfit supplied filter belts offer:

- Excellent particle / solid capture.
- Excellent cake release.
- Dimensional stability
- A variety of seam types.
- A variety of lengths and widths to choose from.
- Durability and long life.

Filter presses

Filter presses have been used in industry for more than 100 years. They are still by far the most efficient filtration equipment utilised to de-water a slurry down to less than 10% moisture content. They are very common in pharmaceutical, waste water, food and mining applications.

The moisture content of the cake produced by a filter press is usually the most important criteria of the whole operation.

Process / operation

Filter presses utilise a solid particle/liquid separation process using pressure. This pressure is applied via a ram to squeeze a number of plates together and a slurry pump which provides the slurry to be de-watered. The method of filtration is what is termed *fixed volume and batch operation,* rather than a continuous operation. Simply put, it means that the filtration process must be stopped to discharge the filter cake before the next batch can be started.

The major components of any filter press are the skeleton and filter pack, which is made up of any number of individual plates. These plates are covered by a filter cloth. The skeleton holds the filter pack together whilst pressure is being generated inside the filter press plate chambers by slurry. Each chamber can only hold a specific volume of slurry.

The process starts by the closing of the filter plates by the hydraulic ram. Then the injection of the slurry into the press to fill up each chamber. The filling time should be as short as possible so as to avoid cake formation in the first chamber before filling up the last chamber.

Whilst the chambers are being filled, the pressure inside the system will increase due to the formation of thick sludge. Then the filtrate (liquid) will be forced and filtered out through the filter cloths and into a collection tray.

More efficient filtering can be achieved in more modern membrane style filter plates by the injection of air, which gives the formed cake a final squeeze before opening the press. Once full pressure is reached, the hydraulic ram will open the press, and the formed filter cakes will drop into a trough underneath the filter press for collection.

There are three main types of filter press styles:

- Plate and frame
- Recessed plate and frame
- Automatic membrane

Filter press clothes and plates

Filterfit supplies a full range of filter press cloths for industry: barrelneck, caulked and drape-over style to fit all major brands of filter presses. We also make a range of synthetic filter fabrics in needled and woven fabrics to suit different applications.

The most common synthetics are Polyester, Polypropylene and Nylon. But other more specialised materials are available upon request.

Key features for filter cloth fabric selection are:

- Strength = good cloth life
- Filtration efficiency
- Cake release
- Filtrate clarity

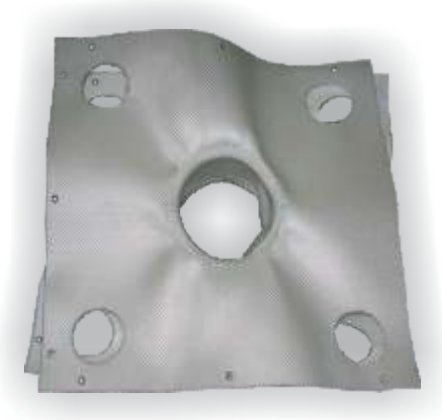

With correct filter cloth selection, all these desired filter cloth characteristics can be realised.

Filterfit can also supply filter press plates for all filter press configurations.

Also available from Filterfit upon request

- Centrifuge liner covers
- Municipal pool candle and plate filter clothes
- Rotary pan filter clothes
- Anode/electroplating bags

A range of non-standard fabricated items suitable for use with:

- Aquaculture
- Brewing and beverage manufacture
- Dairy production
- Irrigation
- Chemical/petrochemical processing
- Edible oil processing
- Pharmaceutical
- Paint and pigment
- Fertilisers
- Pulp and paper
- Minerals and metals

Due to on-going product development, Filterfit reserves the right to change design and specifications without notice

Liquid filter cartridges, housings and accessories

Filterfit offers a selection of liquid filter cartridges, housings and accessories for a large cross section of filtering applications. Liquids ranging from rainwater, tap water, process water, beverages, chemicals or gases can be filtered within our product range.

A small cross section of products are displayed within this catalogue. Should your application fall outside of the parameters of these products, please discuss your application with our representative in order to meet your requirements.

Polyspun cartridges

Polyspun sediment cartridges are constructed using virgin polypropylene, which is spun and melted simultaneously allowing the filter to be formed without the need for a central core to restrict performance. Precise depth filtration is achieved by way of graded density construction. They offer an economical solution for the effective control of sediment, rust, sand, silt and algae without leaving any chemical residue and protect appliances and health with sediment free water. Available in a range of micron sizes, lengths and two diameters.

Wound sediment cartridges

Wound Sediment cartridges are designed for economical sediment filtration. Depth filtration is achieved through the precise winding of polypropylene string around a central core. This central core gives Wound cartridges superior strength when compared to Polyspun style cartridges. Wound cartridges are suitable for removal of sand, silt, rust and scale particles and are compatible with acids, alkalines, gases, corrosive gases and other chemicals. (Please refer to your representative to confirm compatibility with particular chemicals). Available in a range of micron sizes, lengths and two diameters.

Pleated sediment cartridges

Pleated sediment cartridges are suitable for use in applications where a large surface area is required for high dirt holding capacity. Standard cartridges are constructed using spun bonded polyester paper. (Other media are available on request depending on the application). Pleated cartridges are suitable for removal of sediment, scale and rust and enjoy lower pressure drops and less flow restrictions than comparable cartridges. Available in a range of micron sizes, lengths and two diameters.

Resin bonded sediment cartridges

Resin bonded sediment cartridges are manufactured with fibres bonded together to create a solid, durable and porous block. They have excellent chemical resistance. The white (melamine) models are suitable for drinking water, beverages, cosmetics, liquids and some chemicals. The brown (phenolic) models are for use with chemicals such as paints, inks or photographic solutions. Also used for chemical spraying and nozzle protection. Available in a range of micron sizes and in two lengths.

Liquid filter cartridges, housings and accessories

Granular carbon cartridges

Granular carbon cartridges are the first choice for reducing unwanted taste, odour, volatile chemicals or pesticides, leaving beautiful tasting clear water for all drinking applications. A built in after filter assists in the capture of suspended particles and sediment. For clear, tasteless, odourless drinking water, granular carbon is the most suitable medium making it ideal for use with food service, wholesale filtration and many other applications. Available in two lengths and two diameters. After filter, 5 or 20 microns.

Impregnated carbon cartridges

Impregnated carbon cartridges are a more economical solution for general purpose filtration.
Made up from a carbon impregnated cellulose filter media, they are an ideal solution for sediment, odour and taste in light duty applications such as chlorinated water supplies. Available in two lengths, 5 micron only.

Carbon block cartridges

The leading edge technology available for use with the Carbon block style cartridge range offers superior treatment of product without release of carbon fines. Carbon block cartridges are constructed from bonded, activated carbon encased in a polypropylene pre filter and are highly effective in reducing taste, odour, chlorine, cyst, lead and heavy metals. Available in a range of micron sizes, lengths and two diameters.

As well as the above, Filterfit also has many other varieties available.
Please speak with our sales staff if what you are seeking is not listed here.

Due to on-going product development, Filterfit reserves the right to change design and specifications without notice

Cartridge filter selector

	Cartridge type							
	Polyspun	Wound	Pleated	Resin bonded	Granular carbon	Impregnated carbon	Moulded carbon	Carbon Block
Suitable for use with								
Processes	x	x	x	x	x		x	x
Irrigation			x					
Under sink	x	x	x	x	x	x	x	x
Beverages	x	x		x	x		x	x
Water cooler	x	x		x	x		x	x
Food service	x	x	x	x	x		x	x
Ice maker	x	x	x	x	x		x	x
Whole house	x	x	x	x	x		x	x
Drinking water	x	x	x	x	x	x	x	x
Hot water		x						
Low pressure			x					
Suitable for reducing								
Hardness					x			
Scale					x			
Sediment & rust	x	x	x	x	x	x	x	x
VOC		x			x	x	x	x
Colour		x			x		x	x
Iron								
Chlorine		x			x	x	x	x
Pesticides		x			x		x	x
Cysts	x	x	x				x	x
Bacteria							x	
Lead					x			x
Taste & odour		x			x	x	x	x
Heavy metals					x			x
Filtration rating								
Course	x	x	x	x				
Medium	x	x	x	x	x			
Fine	x	x	x	x	x	x		x
Very fine	x	x	x				x	x

Cartridge housing selector

	Standard housing	Maxi-plus housing	High temp housing	St/steel housing
Processes	x	x	x	x
Irrigation	x	x		
Under sink	x			
Beverages	x	x	x	x
Water Cooler	x			
Food service	x	x	x	x
Ice maker	x			
Whole house	x	x		x
Drinking water	x	x	x	x
Hot water			x	x
Low Pressure	x	x	x	x

filterfit
engineered filtration solutions

Due to on-going product development, Filterfit reserves the right to change design and specifications without notice

Filter cartridges

Polyspun sediment cartridges						
Part no.	Type	Diameter	Length	Micron size	Max temp °C	Flow rate l/m
10-0001	Polyspun	65 mm	250 mm	1	64	27
10-0005	Polyspun	65 mm	250 mm	5	64	28
10-0010	Polyspun	65 mm	250 mm	10	64	32
10-0025	Polyspun	65 mm	250 mm	20	64	34
10-0050	Polyspun	65 mm	250 mm	50	64	38
10-0077	Polyspun	65 mm	508 mm	1	64	54
10-0079	Polyspun	65 mm	508 mm	5	64	56
10-0081	Polyspun	65 mm	508 mm	10	64	64
10-0083	Polyspun	65 mm	508 mm	20	64	68
10-0085	Polyspun	65 mm	508 mm	50	64	76
Note: cartridge lengths of 762 mm and 1016 mm available on request						

Polyspun Maxiplus sediment cartridges						
10-0160	Polyspun	115 mm	250 mm	1	64	75
10-0162	Polyspun	115 mm	250 mm	5	64	76
10-0166	Polyspun	115 mm	250 mm	20	64	84
10-0168	Polyspun	115 mm	250 mm	50	64	90
10-0180	Polyspun	115 mm	508 mm	1	64	150
10-0182	Polyspun	115 mm	508 mm	5	64	152
10-0186	Polyspun	115 mm	508 mm	20	64	168
10-0188	Polyspun	115 mm	508 mm	50	64	180

Wound sediment cartridges						
10-0201	Wound	65 mm	250 mm	1	74	26
10-0205	Wound	65 mm	250 mm	5	74	27
10-0210	Wound	65 mm	250 mm	10	74	32
10-0220	Wound	65 mm	250 mm	20	74	38
10-0250	Wound	65 mm	250 mm	50	74	42
10-0200	Wound	65 mm	250 mm	100	74	48
10-0301	Wound	65 mm	508 mm	1	74	52
10-0305	Wound	65 mm	508 mm	5	74	54
10-0310	Wound	65 mm	508 mm	10	74	64
10-0320	Wound	65 mm	508 mm	20	74	76
10-0350	Wound	65 mm	508 mm	50	74	84
10-0400	Wound	65 mm	508 mm	100	74	96
Note: cartridge lengths of 762 mm and 1016 mm available on request						

Filter cartridges

Wound Maxiplus sediment cartridges						
Part no.	Type	Diameter	Length	Micron size	Max temp °C	Flow rate l/m
10-0405	Wound	115 mm	250 mm	1	74	75
10-0410	Wound	115 mm	250 mm	5	74	76
10-0415	Wound	115 mm	250 mm	10	74	79
10-0420	Wound	115 mm	250 mm	20	74	82
10-0425	Wound	115 mm	250 mm	50	74	90
10-0430	Wound	115 mm	508 mm	1	74	150
10-0435	Wound	115 mm	508 mm	5	74	152
10-0440	Wound	115 mm	508 mm	10	74	158
10-0445	Wound	115 mm	508 mm	20	74	164
10-0450	Wound	115 mm	508 mm	50	74	180

Pleated sediment cartridges						
10-0600	Pleated	65 mm	250 mm	1	63	41
10-0602	Pleated	65 mm	250 mm	5	63	43
10-0606	Pleated	65 mm	250 mm	20	63	45
10-0608	Pleated	65 mm	250 mm	30	63	46
10-0610	Pleated	65 mm	250 mm	50	63	48
10-0612	Pleated	65 mm	250 mm	100	63	52
10-0620	Pleated	65 mm	508 mm	1	63	82
10-0622	Pleated	65 mm	508 mm	5	63	86
10-0626	Pleated	65 mm	508 mm	20	63	90
10-0628	Pleated	65 mm	508 mm	30	63	92
10-0630	Pleated	65 mm	508 mm	50	63	96
10-0632	Pleated	65 mm	508 mm	100	63	104
Note: Cartridge lengths of 762 mm and 1016 mm available on request						

Pleated Maxi plus sediment cartridges						
10-0640	Pleated	115 mm	250 mm	1	63	88
10-0642	Pleated	115 mm	250 mm	5	63	90
10-0644	Pleated	115 mm	250 mm	20	63	94
10-0646	Pleated	115 mm	250 mm	30	63	95
10-0648	Pleated	115 mm	250 mm	50	63	100
10-0650	Pleated	115 mm	250 mm	100	63	110
10-0660	Pleated	115 mm	508 mm	1	63	176
10-0662	Pleated	115 mm	508 mm	5	63	180
10-0666	Pleated	115 mm	508 mm	20	63	190
10-0668	Pleated	115 mm	508 mm	50	63	200
10-0670	Pleated	115 mm	508 mm	100	63	220

Grooved sediment cartridges						
Part no.	Type	Diameter	Length	Micron size	Max temp °C	Flow rate l/m
10-0700	Grooved (white)	65 mm	250 mm	5	120	31
10-0704	Grooved (white)	65 mm	250 mm	50	120	42
10-0706	Grooved (brown)	65 mm	250 mm	5	120	31
10-0712	Grooved (brown)	65 mm	250 mm	125	120	52
10-0720	Grooved (white)	65 mm	508 mm	5	120	62
10-0724	Grooved (white)	65 mm	508 mm	50	120	84
10-0726	Grooved (brown)	65 mm	508 mm	5	120	62
10-0732	Grooved (brown)	65 mm	508 mm	125	120	104

Granular carbon cartridges - with after filter						
10-0500	GC051	65 mm	250 mm	5	52	13
10-0502	GC202	65 mm	508 mm	20	52	27

Granular Maxi plus carbon cartridges - with after filter						
10-0504	GC20MP1	115 mm	250 mm	20	52	32
10-0506	GC20MP2	115 mm	508 mm	20	52	40

Impregnated carbon cartridges - impregnated carbon (light duty)						
10-0510	IC051	65 mm	250 mm	5	52	19

Moulded carbon cartridges - moulded block (medium duty)						
10-0520	MC011	65 mm	250 mm	1	52	16
10-0522	MC051	65 mm	250 mm	5	52	16
10-0526	MC052	65 mm	508 mm	5	52	22

Moulded Maxi plus carbon cartridges - moulded block (medium duty)						
10-0530	MC05MP1	115 mm	250 mm	5	52	40
10-0532	MC05MP2	115 mm	508 mm	5	52	80

Grooved sediment cartridges						
Carbon block cartridges - bonded activated carbon (superior duty)						
10-0540	CB951	65 mm	250 mm	0.5	85	15
10-0544	CB051	65 mm	250 mm	5	85	16
10-0546	CB101	65 mm	250 mm	10	85	18
10-0550	CB952	65 mm	508 mm	0.5	85	28
10-0552	CB052	65 mm	508 mm	5	85	30
10-0554	CB102	65 mm	508 mm	10	85	32

Carbon block Maxi plus cartridges - bonded activated carbon (superior duty)						
10-0560	CB95MP1	115 mm	250 mm	0.5	85	20
10-0562	CB05MP1	115 mm	250 mm	5	85	21
10-0564	CB10MP1	115 mm	250 mm	10	85	23
10-0570	CB95MP2	115 mm	508 mm	0.5	85	40
10-0572	CB05MP2	115 mm	508 mm	5	85	41
10-0574	CB10MP2	115 mm	508 mm	10	85	42

Cartridge housings

Part no.	Nom. length	Cartridge dia.	Connection size	Description	Max pressure kPa	Max temp °C	Flow rate l/m
10-0910	254 mm	65 mm	19 mm (3/4")	FP10M blue bowl	900	52	38
10-0912	254 mm	65 mm	19 mm (3/4")	FP10T clear bowl	900	52	38
10-0914	254 mm	65 mm	25.4 mm (1")	LC1010 white bowl	900	52	60
10-0916	254 mm	65 mm	25.4 mm (1")	LC1010C clear bowl	900	52	60
10-0920	508 mm	65 mm	19 mm (3/4")	FP20M blue bowl	900	52	76
Tandem and triple housings available on request							

Maxi plus high capacity cartridge housings							
10-1000	254 mm	115 mm	25.4 mm (1")	MP100 grey bowl	900	52	80
10-1010	254 mm	115 mm	38.1 mm (1-1/2")	MP200 grey bowl	900	52	85
10-1030	508 mm	115 mm	25.4 mm (1")	MP300 grey bowl	900	52	160
10-1040	508 mm	115 mm	38.1 mm (1-1/2")	MP400 grey bowl	900	52	180
All maxi plus housings come with pressure relief button							

High temperature cartridge housings							
10-1050	254 mm	65 mm	19 mm (3/4")	HT100 red bowl	1380	93	38

Stainless steel cartridge housings (Brass head)							
10-1100	254 mm	65 mm	12.7 mm (1/2")	SS115 stainless bowl	2070	99	38
10-1110	254 mm	65 mm	19 mm (3/4")	SS120 stainless bowl	2070	99	38
10-1120	254 mm	65 mm	25.4 mm (1")	SS125 stainless bowl	2070	99	38
10-1130	508 mm	65 mm	19 mm (3/4")	SS220 stainless bowl	2070	99	76
10-1140	508 mm	65 mm	25.4 mm (1")	SS225 stainless bowl	2070	99	90
Includes spanner tool, mounting bracket and drain plug							

Stainless steel cartridge housings (stainless head)							
10-1150	254 mm	65 mm	19 mm (3/4")	SS120-S stainless bowl	2070	99	38
10-1160	508 mm	65 mm	19 mm (3/4")	SS220-S stainless bowl	2070	99	76
10-1170	254 mm	115 mm	25.4 mm (1")	SS25MP1 stainless bowl	2070	99	90
10-1180	508 mm	115 mm	38.1 mm (1-1/2")	SS40MP2 stainless bowl	2070	99	180
Includes spanner tool, mounting bracket and drain plug							

filterfit
engineered filtration solutions

Due to on-going product development, Filterfit reserves the right to change design and specifications without notice

Cartridge & cartridge housing accessories

Cartridge joiners		
Part No.	**Description**	**Box qty.**
10-5602	CS01 joins two 65 mm dia. cartridges	12
10-5604	CS02 joins two 115 mm dia. cartridges	12

Mounting brackets		
Part No.	**Description**	**Housing type**
10-5606	Single housing kit (FPBK)	FP series
10-5608	Twin housing kit (FPBK2)	FP series
10-5610	Triple housing kit (FPBK3)	FP series
10-5612	Single housing kit U-type (HTBK)	HT series
10-5614	Single housing kit (LCBK)	LC series
10-5616	Single housing kit (MPBK-G)	MP series
10-5618	Twin housing kit (MPBK2-G)	MP series

Housing spanners		
Part No.	**Description**	**Housing type**
10-5620	Spanner (FPSP)	FP series
10-5622	Spanner (LCSP)	LC series
10-5624	Spanner (MPSP-G)	MP series

Cartridge housing assessories			
Part no.	**Description**	**Housing type**	**Pack qty**
10-5626	Neoprene O Ring seal (FPOR)	FP series	6
10-5628	Neoprene O Ring seal (LCOR)	LC series	6
10-5630	Neoprene O Ring seal (HTOR)	HT100 series	6
10-5632	Neoprene O Ring seal (MPOR-G)	MP series	6
10-5634	Neoprene O Ring seal (SSOR)	SS series	6
10-5636	Viton O Ring seal (SSOR-V)	SS	6

filterfit engineered filtration solutions

Due to on-going product development, Filterfit reserves the right to change design and specifications without notice

Pressure vessel bags

Utilising a bag filter meets the special requirements associated with high flow rates, high viscosity, high temperature and is an economical method of filtering a liquid where the solids content is less than 250 parts per million (ppm).

Two media types are used in the manufacture of most pressure vessel bags: needle felt and monofilament.

Needlefelt bags are a non woven composition of fibres designed to trap particles within the matrix and throughout the depth of the media. Felts used for pressure vessel bags are almost exclusively manufactured from either polyester or polypropylene.

Both have a broad chemical compatibility but have different temperature capabilities. Polyester will typically operate up to 135 °C while Polypropylene will operate up to 90 °C. *(Temperature capabilities will vary depending on chemical type and concentrations. see charts for bag dimensions and micron sizes available).*

Monofilament bags are manufactured from precision woven fabrics, typically Nylon or Polyester however; Polypropylene can also be used in some instances. These fabrics are woven from single strands of thread and offer a more consistent pore sizes and greater mechanical strength than that of a felt.

Monofilament fabrics have no depth filtration capability and all filtration is at the surface of the bag. In many applications, monofilament bags can be cleaned and reused.

Nylon has good Alkali resistance but limited acid resistance with a maximum temperature of approximately 110 °C. Polyester will typically operate up to 135 °C while Polypropylene will operate up to 90 °C. *(Temperature capabilities will vary depending on chemical type and concentrations. See charts on pages 24 - 26 for bag dimensions and micron sizes available).*

Side entry pressure vessels

Part No.	Model No.
10-6002	S-101
Specifications	
Configuration	Side entry
No. of bags	One
Bag size	P1
Construction	304 stainless steel
Max pressure	10 bar @ 160 °C
Fitting type (N1&N2)	**ANSI flange
Fitting size	50 mm (2")
Lid hole (N3)	6.4 mm (1/4") npt with plug
*Max flow rate	20 m^3/h
Filter area	0.25 m^2
Housing volume	18 litre
Installation height	97 cm
Installation space	60 x 60 cm
*Depending on product viscosity	
**Also available in B.S.P.	

Part No.	Model No.
10-6003	S-102
Specifications	
Configuration	Side entry
No. of bags	One
Bag size	P2
Construction	304 stainless steel
Max pressure	10 bar @ 160 °C
Fitting type (N1&N2)	**ANSI flange
Fitting size	50 mm (2")
Lid hole (N3)	6.4 mm (1/4") npt with plug
*Max flow rate	40 m^3/h
Filter area	0.50 m^2
Housing volume	32 litre
Installation height	180 cm
Installation space	60 x 60 cm
*Depending on product viscosity	
**Also available in B.S.P.	

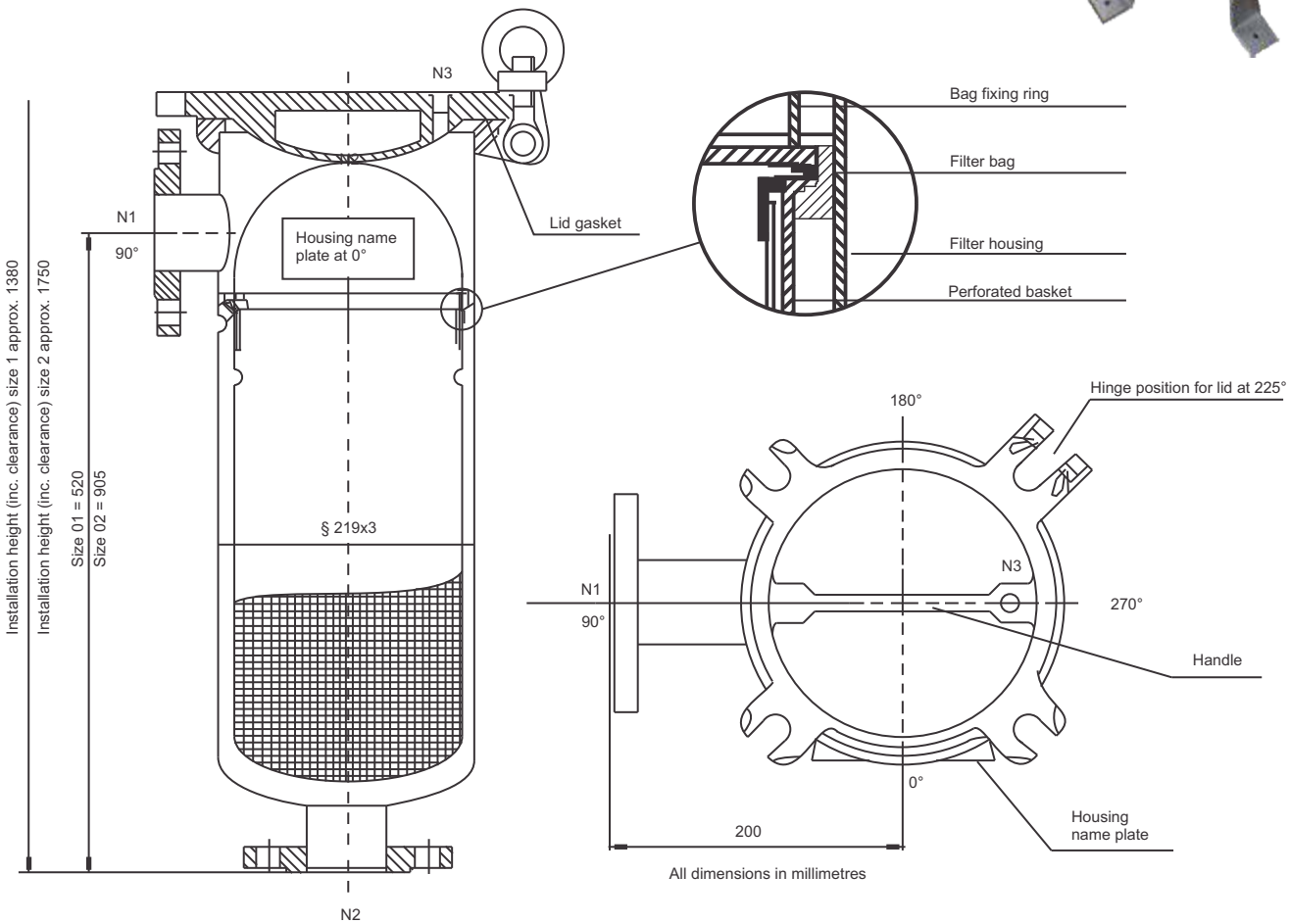

filterfit
engineered filtration solutions

Due to on-going product development, Filterfit reserves the right to change design and specifications without notice

Top entry pressure vessels

Part No.	Model No.
10-6004	T-101
Specifications	
Configuration	Top entry
No. of bags	One
Bag size	P1
Construction	304 stainless steel
Max pressure	10 bar @ 160 °C
Fitting type (N1&N2)	**ANSI Flange
Fitting size	50 mm (2")
Lid hole (N3)	6.4 mm (1/4") npt with plug
*Max flow rate	20 m^3/h
Filter area	0.25 m^2
Housing volume	13 litre
Installation height	84 cm
Installation space	70 x 70 cm
*Depending on product viscosity	
**Also available in B.S.P.	

Part No.	Model No.
10-6005	T-102
Specifications	
Configuration	Top entry
No. of bags	One
Bag size	P2
Construction	304 stainless steel
Max pressure	10 bar @ 160 °C
Fitting type (N1&N2)	**ANSI flange
Fitting size	50 mm (2")
Lid hole (N3)	6.4 mm (1/4") npt with plug
*Max flow rate	40 m^3/h
Filter area	0.50 m^2
Housing volume	27.5 litre
Installation height	168 cm
Installation space	70 x 70 cm
*Depending on product viscosity	
**Also available in B.S.P.	

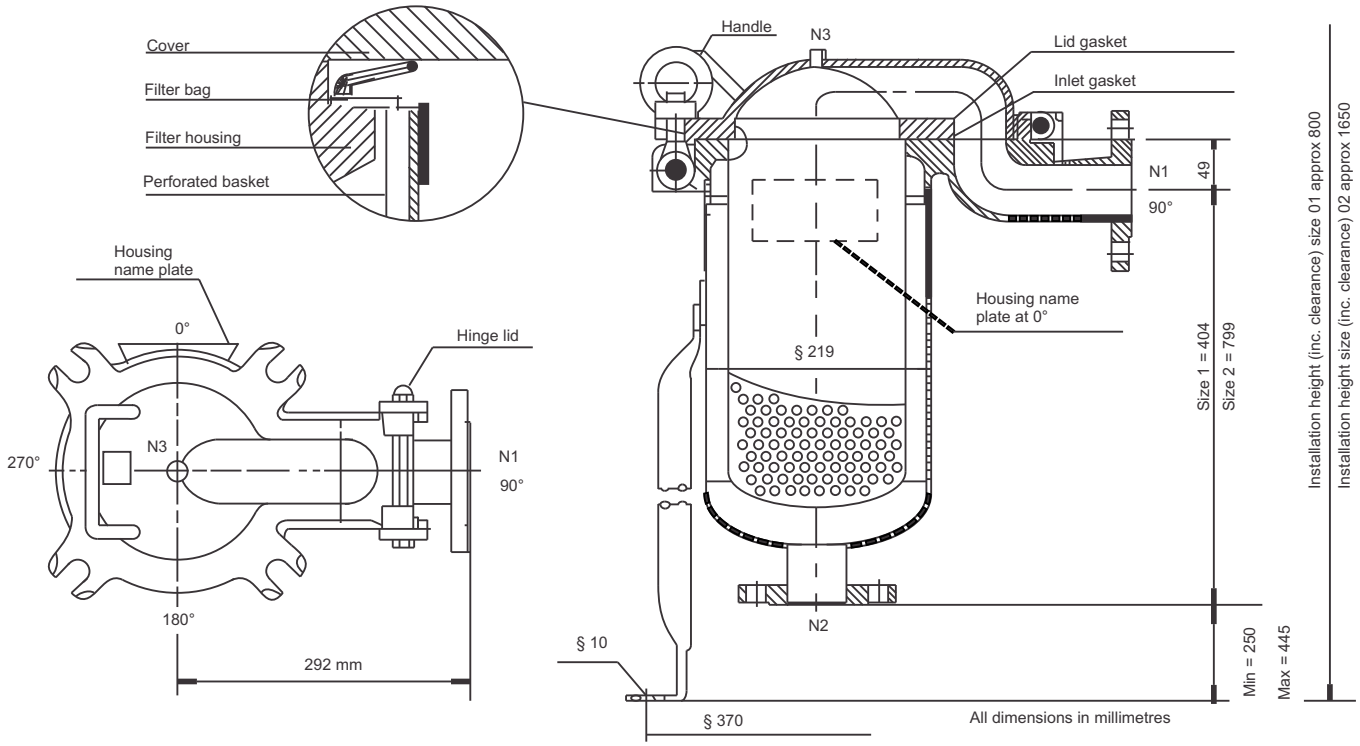

Tandem side entry pressure vessel

Part No.	Model No.
10-6020	S-202
Specifications	
Configuration	Side entry
No. of bags	Two
Bag size	P2
Construction	304 stainless steel
Max pressure	10 bar @ 160 °C
Fitting type (N1&N2)	**ANSI flange
Fitting size	50 mm (2")
Lid hole (N3)	6.4 mm (1/4") npt with plug
*Max flow rate	80 m^3/h
Filter area	1.0 m^2
Housing volume	64 litre
Installation height	124 cm
Installation space	50 x 50 cm
*Depending on product viscosity	
**Also available in B.S.P.	

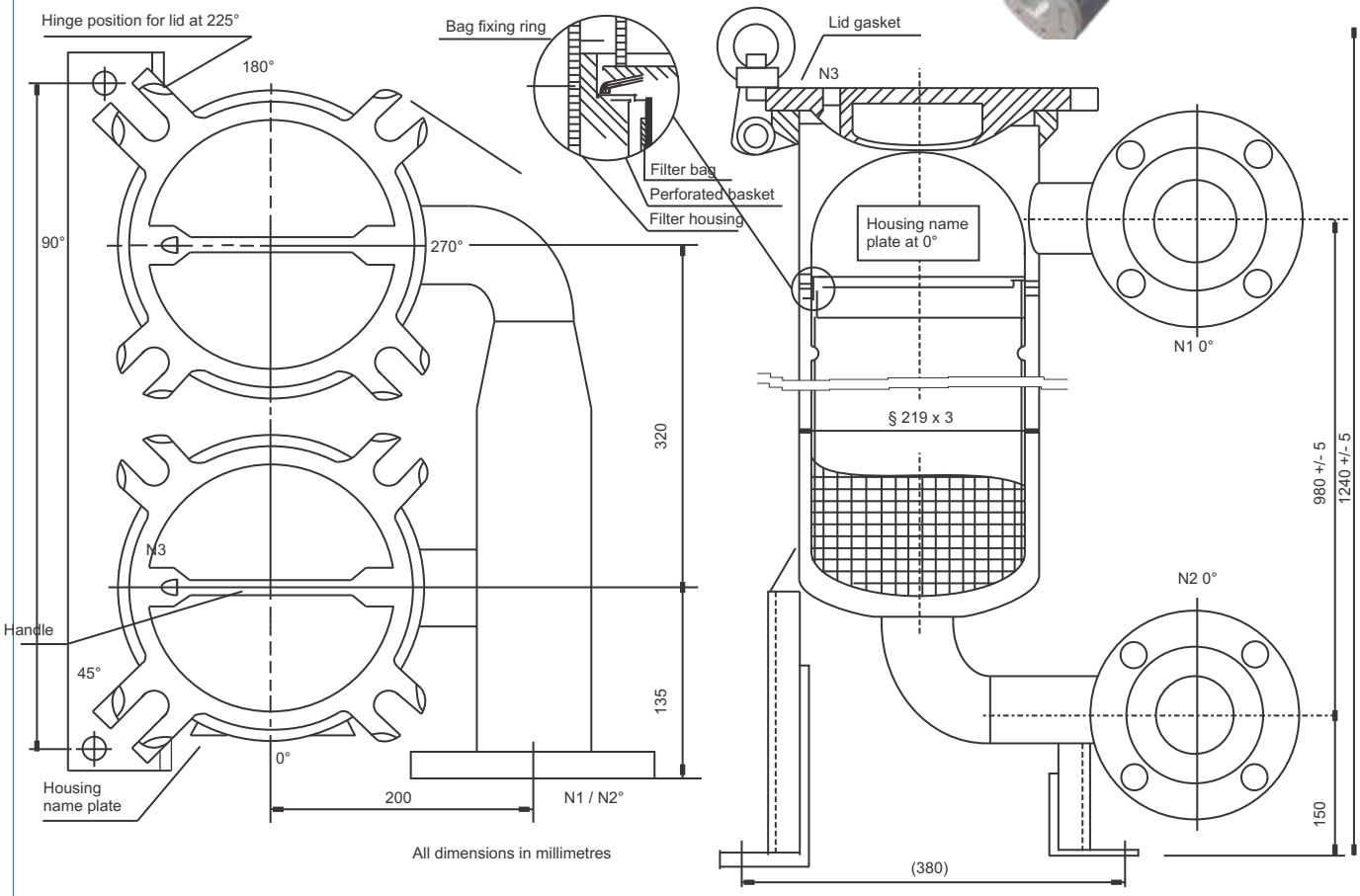

filterfit
engineered filtration solutions

Due to on-going product development, Filterfit reserves the right to change design and specifications without notice

Tandem top entry pressure vessel

Part No.	Model No.
10-6010	T-202
Specifications	
Configuration	Top entry
No. of bags	Two
Bag size	P2
Construction	304 stainless steel
Max pressure	10 bar @ 160 °C
Fitting type (N1&N2)	**ANSI flange
Fitting size	50 mm (2")
Lid hole (N3)	6.4 mm (1/4") npt with plug
*Max flow rate	80 m^3/h
Filter area	1.0 m^2
Housing volume	55.5 litre
Installation height	110 cm
Installation space	50 x 50 cm
*Depending on product viscosity	
**Also available in B.S.P.	

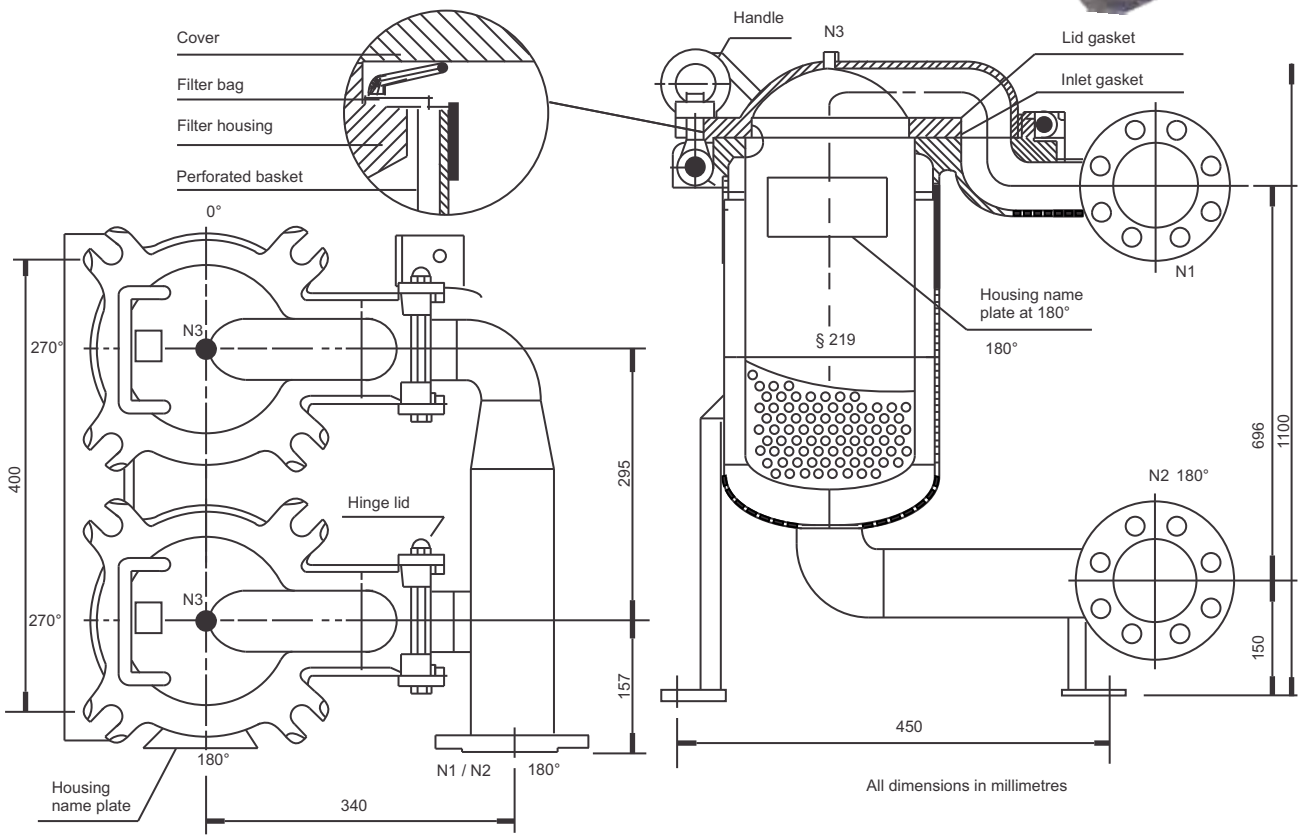

filterfit engineered filtration solutions

Due to on-going product development, Filterfit reserves the right to change design and specifications without notice

Polypropylene pressure vessels

Part No.	Model No.
10-6006	S-102-P08
Specifications	
Configuration	Side entry
No. of bags	One
Bag size	P2
Construction	Polypropylene
Max. pressure	8 bar / 42°C
Max. temp	80 °C
Fitting type	BSP
Fitting size	50mm (2")
Lid hole	12.5mm (1/2") npt with plug
*Max flow rate	45 m^3/h
Filter area	0.50 m^2
Housing volume	32 litre
Installation height	165 cm + 90 cm (bag)
Installation space	60 x 60 cm
*Depending on product viscosity	

Part No.	Model No.
10-6007	S-106-P06
Specifications	
Configuration	Side entry
No. of Bags	One
Bag size	P5
Construction	Polypropylene
Max. pressure	6 bar / 42 °C
Max. temp	80 Deg C
Fitting type	BSP
Fitting size	50mm (2")
Lid hole	6.4mm (1/4") npt with plug
*Max flow rate	20 m^3/hr
Filter area	0.22 m^2
Housing volume	8 litre
Installation height	120 cm x 60 cm (bag)
Installation space	35 x 35 cm
*Depending on product viscosity	

Accessories to suit Polypropylene housings			
Part no.	**Item**	**Model to suit P5 size unit**	**Model to suit P2 size unit**
10-5720	PP restrainer basket	PBT-6	PBT-2-PQ
10-5722	PP basket gasket	N/A	OR-S-P-B-Q
10-5726	2" BSP to ANSI flange adapter	2" BSP/2"ANSI	2" BSP/2"ANSI
10-5728	PP vent safety valve	BV-1/4"-P	BV-1/2"-Q
10-2730	Inlet/outlet plug	N/A	2" Plug
10-5732	PP bag holder	BFR-06	BFR-07-Q
10-5736	PP presure gauge	N/A	PGE-1/2-10-P
10-5738	Lid gasket Buna N	OR-S-B-C06	OR-S-B-C-Q
10-5740	Lid gasket Viton	OR-S-V-C06	OR-S-V-C-Q
10-5744	Cartridge adapter	Cartridge adapter	N/A

filterfit
engineered filtration solutions

Due to on-going product development, Filterfit reserves the right to change design and specifications without notice

Multi bag & cartridge housings

Multi bag housing

Multi cartridge housing

Multi bag and cartridge vessel housings for up to 24 bags or 110 cartridges are available upon request and can be customised to suit specific applications.
Available options are:

- Entry/exit point (side, top, bottom)
- Qty of bags/cartridges required
- Closure style (V Clamp/Eyebolt)
- Lid lifting style (Davit lifter/spring assistance)
- Pressure rating
- Housing material (304 SS, 316 SS, carbon steel)
- Inlet & outlet type (ANSI Flange, BSP, Din Flange, Tri clamp, Butt weld etc.)
- Connection size

Please speak with our technical representatives to have your housing customised to meet your specific application.

Pressure vessel accessories

Part no.	Item	Model to suit P1 size unit	Model to suit P2 size unit
10-5660	* Perferated basket	PBT-1	
10-5662	* Perferated basket		PBT-2
10-5664	* Bolt set (ring nut, eye bolt) 4 per housing	EBS-M18-C-75	EBS-M18-C-75
10-5666	* Bag fixing ring	BFR-97	BFR-97
10-5668	* Tripod leg assembly	LAY-T	LAY-T
10-5670	Wall mounting brackets	WMB-T	WMB-T
10-5672	Mesh strainer basket (25 - 800 um)	FMB-01 - (25-800)	
10-5674	Mesh strainer basket (25 - 800 um)		FMB-02 - (25-800)
10-5676	Evacuation balloon	BAL-1	
10-5678	Evacuation balloon		BAL-2
10-5680	Bag positioner	BLK-1	
10-5682	Bag positioner		BLK-2
10-5684	LOFNETIC magnetic insert	BLM-1/3-1	
10-5686	LOFNETIC magnetic insert		BLM-1/3-2
10-5688	* Lid gasket Nitrile (Buna N)	OR-T-B-C	OR-T-B-C
10-5690	O-ring gaskets (VITON)	VITON	VITON
10-5692	O-ring gaskets (EPDM)	EPDM	EPDM
10-5694	O-ring gaskets (FEP/VITON)	FEP/VITON	FEP/VITON
10-5696	O-ring gaskets (FEP/Silicone)	FEP/Silicone	FEP/Silicone
10-5698	O-ring gaskets (Teflon)	Teflon	Teflon
10-5700	Pressure guage (10 bar) 1/4" BSP male	PGE-IND-A-1/4"	PGE-IND-A-1/4"
10-5702	Vent valve 1/4" BSP male	E-1/4"-A	E-1/4"-A
10-5704	90 deg./50mm elbow pipe for filter outlet	RB-DN50-A	RB-DN50-A
10-5706	Pipe-enlarging module BSP50/65	RV-DN50/65-A	RV-DN50/65-A

Parts not listed available upon request
* parts included with filter housing

Pressure vessel gasket selection

Application / tolerance	Pressure vessel gasket seal selection properties				
	Nitrile (Buna N)	EPDM	Silicone	Viton	Teflon
Working temp. range °C	40-120	60-150	70-230	40-250	20-250
Max. temp. °C	120	150	230	250	260
Elongation	2	2	1	5	3
Elasticity	2	2	4	4	5
Abrasive resistance	2	4	5	4	1
Impact resistance	2	2	5	4	1
Air tightness	2	4	5	2	1
Oxidation resistance	1	2	1	4	2
Ozone resistance	5	1	1	1	2
Resistance to elements	4	1	1	1	1
Oil resistance	2	4	4	1	1
Animal/veg oil proof	1	2	3	1	1
Ethanol tolerance	2	5	2	2	1
Alkali resistance	2	2	5	3	1
Acid resistance	2	2	4	2	1
Solvent resistance	1	5	5	1	1
Oxidising solvent resistance	5	1	4	5	1
Vapour resistance	2	1	2	2	1
Acetone	5	2	5	1	1

Performance table
1 = best
2 = excellent
3 = good
4 = moderate
5 = poor

Pressure vessel bags

Felt style bags						
Part No. metal ring style	Part No. plastic top style	Model	Diameter	Length nom.	Fabric	Micron
10-11001	10-12001	P1	178 mm	440 mm	PE Felt	1
10-11005	10-12005	P1	178 mm	440 mm	PE Felt	5
10-11010	10-12010	P1	178 mm	440 mm	PE Felt	10
10-11025	10-12025	P1	178 mm	440 mm	PE Felt	25
10-11050	10-12050	P1	178 mm	440 mm	PE Felt	50
10-11075	10-12075	P1	178 mm	440 mm	PE Felt	75
10-11100	10-12100	P1	178 mm	440 mm	PE Felt	100
10-11150	10-12150	P1	178 mm	440 mm	PE Felt	150
10-11200	10-12200	P1	178 mm	440 mm	PE Felt	200
Part No. metal ring style	Part No. plastic top style	Model	Diameter	Length nom.	Fabric	Micron
10-21001	10-22001	P2	178 mm	820 mm	PE Felt	1
10-21005	10-22005	P2	178 mm	820 mm	PE Felt	5
10-21010	10-22010	P2	178 mm	820 mm	PE Felt	10
10-21025	10-22025	P2	178 mm	820 mm	PE Felt	25
10-21050	10-22050	P2	178 mm	820 mm	PE Felt	50
10-21075	10-22075	P2	178 mm	820 mm	PE Felt	75
10-21100	10-22100	P2	178 mm	820 mm	PE Felt	100
10-21150	10-22150	P2	178 mm	820 mm	PE Felt	150
10-21200	10-22200	P2	178 mm	820 mm	PE Felt	200
Part No. metal ring style	Part No. plastic top style	Model	Diameter	Length nom.	Fabric	Micron
10-31001	10-32001	P3	102 mm	240 mm	PE Felt	1
10-31005	10-32005	P3	102 mm	240 mm	PE Felt	5
10-31010	10-32010	P3	102 mm	240 mm	PE Felt	10
10-31025	10-32025	P3	102 mm	240 mm	PE Felt	25
10-31050	10-32050	P3	102 mm	240 mm	PE Felt	50
10-31075	10-32075	P3	102 mm	240 mm	PE Felt	75
10-31100	10-32100	P3	102 mm	240 mm	PE Felt	100
10-31150	10-32150	P3	102 mm	240 mm	PE Felt	150
10-31200	10-32200	P3	102 mm	240 mm	PE Felt	200
10-41001	10-42001	P4	102 mm	420 mm	PE Felt	1
10-41005	10-42005	P4	102 mm	420 mm	PE Felt	5
10-41010	10-42010	P4	102 mm	420 mm	PE Felt	10
10-41025	10-42025	P4	102 mm	420 mm	PE Felt	25
10-41050	10-42050	P4	102 mm	420 mm	PE Felt	50
10-41075	10-42075	P4	102 mm	420 mm	PE Felt	75
10-41100	10-42100	P4	102 mm	420 mm	PE Felt	100
10-41150	10-42150	P4	102 mm	420 mm	PE Felt	150
10-41200	10-42200	P4	102 mm	420 mm	PE Felt	200
	10-52001	P5	150 mm	550 mm	PE Felt	1
	10-52005	P5	150 mm	550 mm	PE Felt	5
	10-52010	P5	150 mm	550 mm	PE Felt	10
	10-52025	P5	150 mm	550 mm	PE Felt	25
	10-52050	P5	150 mm	550 mm	PE Felt	50
	10-52075	P5	150 mm	550 mm	PE Felt	75
	10-52100	P5	150 mm	550 mm	PE Felt	100
	10-52150	P5	150 mm	550 mm	PE Felt	150
	10-52200	P5	150 mm	550 mm	PE Felt	200

Metal ring style

Plastic top style

Plastic top style

Plastic top style

filterfit
engineered filtration solutions

Due to on-going product development, Filterfit reserves the right to change design and specifications without notice

Pressure vessel bags

Monofilament style bags						
Part no. metal ring style	Part no. plastic top style	Model	Diameter	Length nom.	Fabric	Micron
10-16050	10-17050	P1	178 mm	440 mm	PE Mono	50
10-16080	10-17080	P1	178 mm	440 mm	PE Mono	80
10-16100	10-17100	P1	178 mm	440 mm	PE Mono	100
10-16125	10-17125	P1	178 mm	440 mm	PE Mono	125
10-16150	10-17150	P1	178 mm	440 mm	PE Mono	150
10-16200	10-17200	P1	178 mm	440 mm	PE Mono	200
10-16250	10-17250	P1	178 mm	440 mm	PE Mono	250
10-16300	10-17300	P1	178 mm	440 mm	PE Mono	300
10-16400	10-17400	P1	178 mm	440 mm	PE Mono	400
10-16600	10-17600	P1	178 mm	440 mm	PE Mono	600
10-16800	10-17800	P1	178 mm	440 mm	PE Mono	800
10-16995	10-17995	P1	178 mm	440 mm	PE Mono	1000
10-26050	10-27050	P2	178 mm	820 mm	PE Mono	50
10-26080	10-27080	P2	178 mm	820 mm	PE Mono	80
10-26100	10-27100	P2	178 mm	820 mm	PE Mono	100
10-26125	10-27125	P2	178 mm	820 mm	PE Mono	125
10-26150	10-27150	P2	178 mm	820 mm	PE Mono	150
10-26200	10-27200	P2	178 mm	820 mm	PE Mono	200
10-26250	10-27250	P2	178 mm	820 mm	PE Mono	250
10-26300	10-27300	P2	178 mm	820 mm	PE Mono	300
10-26400	10-27400	P2	178 mm	820 mm	PE Mono	400
10-26600	10-27600	P2	178 mm	820 mm	PE Mono	600
10-26800	10-27800	P2	178 mm	820 mm	PE Mono	800
10-26995	10-27995	P2	178 mm	820 mm	PE Mono	1000
10-36050	10-37050	P3	102 mm	240 mm	PE Mono	50
10-36080	10-37080	P3	102 mm	240 mm	PE Mono	80
10-36100	10-37100	P3	102 mm	240 mm	PE Mono	100
10-36125	10-37125	P3	102 mm	240 mm	PE Mono	125
10-36150	10-37150	P3	102 mm	240 mm	PE Mono	150
10-36200	10-37200	P3	102 mm	240 mm	PE Mono	200
10-36250	10-37250	P3	102 mm	240 mm	PE Mono	250
10-36300	10-37300	P3	102 mm	240 mm	PE Mono	300
10-36400	10-37400	P3	102 mm	240 mm	PE Mono	400
10-36600	10-37600	P3	102 mm	240 mm	PE Mono	600
10-36800	10-37800	P3	102 mm	240 mm	PE Mono	800
10-36995	10-37995	P3	102 mm	240 mm	PE Mono	1000

Metal ring style

Plastic top style

Plastic top style

Plastic top style

filterfit
engineered filtration solutions

Due to on-going product development, Filterfit reserves the right to change design and specifications without notice

Pressure vessel bags

Monofilament style bags						
Part no. metal ring style	Part no. plastic top style	Model	Diameter	Length nom.	Fabric	Micron
10-46080	10-47080	P4	102 mm	420 mm	PE Mono	80
10-46100	10-47100	P4	102 mm	420 mm	PE Mono	100
10-46125	10-47125	P4	102 mm	420 mm	PE Mono	125
10-46150	10-47150	P4	102 mm	420 mm	PE Mono	150
10-46200	10-47200	P4	102 mm	420 mm	PE Mono	200
10-46250	10-47250	P4	102 mm	420 mm	PE Mono	250
10-46300	10-47300	P4	102 mm	420 mm	PE Mono	300
10-46400	10-47400	P4	102 mm	420 mm	PE Mono	400
10-46600	10-47600	P4	102 mm	420 mm	PE Mono	600
10-46800	10-47800	P4	102 mm	420 mm	PE Mono	800
10-46995	10-47995	P4	102 mm	420 mm	PE Mono	1000
	10-57050	P5	150 mm	550 mm	PE Mono	50
	10-57080	P5	150 mm	550 mm	PE Mono	80
	10-57100	P5	150 mm	550 mm	PE Mono	100
	10-57125	P5	150 mm	550 mm	PE Mono	125
	10-57150	P5	150 mm	550 mm	PE Mono	150
	10-57200	P5	150 mm	550 mm	PE Mono	200
	10-57250	P5	150 mm	550 mm	PE Mono	250
	10-57300	P5	150 mm	550 mm	PE Mono	300
	10-57400	P5	150 mm	550 mm	PE Mono	400
	10-57600	P5	150 mm	550 mm	PE Mono	600
	10-57800	P5	150 mm	550 mm	PE Mono	800
	10-57995	P5	150 mm	550 mm	PE Mono	1000

Metal ring style

Plastic top style

Plastic top style

Stainless steel adapter head		
Part No.	Fitting size	to suit
10-5600	50 mm (2") BSP	P1 & P2 size bag, metal ring style

Plastic top style

filterfit
engineered filtration solutions

Due to on-going product development, Filterfit reserves the right to change design and specifications without notice

Polyester felt or monofilament tie top bags

Polyester flt tie top bags				
Part no.	Width	Length	Fabric	Micron
10-3000	300 mm	440 mm	PE Felt	1
10-3005	300 mm	440 mm	PE Felt	5
10-3010	300 mm	440 mm	PE Felt	10
10-3015	300 mm	440 mm	PE Felt	25
10-3020	300 mm	440 mm	PE Felt	50
10-3025	300 mm	440 mm	PE Felt	75
10-3030	300 mm	440 mm	PE Felt	100
10-3035	300 mm	440 mm	PE Felt	150
10-3040	300 mm	440 mm	PE Felt	200
10-3100	300 mm	800 mm	PE Felt	1
10-3105	300 mm	800 mm	PE Felt	5
10-3110	300 mm	800 mm	PE Felt	10
10-3115	300 mm	800 mm	PE Felt	25
10-3120	300 mm	800 mm	PE Felt	50
10-3125	300 mm	800 mm	PE Felt	75
10-3130	300 mm	800 mm	PE Felt	100
10-3135	300 mm	800 mm	PE Felt	150
10-3140	300 mm	800 mm	PE Felt	200

Nylon or polyester monofilament tie top bags				
Part no.	Width	Length nom.	Fabric	Micron
10-3200	300 mm	440 mm	PE Mono	50
10-3205	300 mm	440 mm	PE Mono	80
10-3210	300 mm	440 mm	PE Mono	100
10-3225	300 mm	440 mm	PE Mono	125
10-3230	300 mm	440 mm	PE Mono	150
10-3235	300 mm	440 mm	PE Mono	200
10-3240	300 mm	440 mm	PE Mono	250
10-3245	300 mm	440 mm	PE Mono	300
10-3250	300 mm	440 mm	PE Mono	400
10-3255	300 mm	440 mm	PE Mono	600
10-3260	300 mm	440 mm	PE Mono	800
10-3300	300 mm	800 mm	PE Mono	50
10-3305	300 mm	800 mm	PE Mono	80
10-3310	300 mm	800 mm	PE Mono	100
10-3325	300 mm	800 mm	PE Mono	125
10-3330	300 mm	800 mm	PE Mono	150
10-3335	300 mm	800 mm	PE Mono	200
10-3340	300 mm	800 mm	PE Mono	250
10-3345	300 mm	800 mm	PE Mono	300
10-3350	300 mm	800 mm	PE Mono	400
10-3355	300 mm	800 mm	PE Mono	600
10-3360	300 mm	800 mm	PE Mono	800

Monofilament woven meshes for aquaculture

Part No.	Description	Mesh opening (micron)	Open area (%)	Mesh count (cm)	Thread diameter (micron)
14-2000	PA 3 XXX	300	46	23	140
14-2002	PA 4 XXX	280	43	24	140
14-2004	PA 5 XXX	255	46	27	120
14-2006	PA 6 XXX	212	40	30	120
14-2008	PA 7 XXX	200	39	31	120
14-2010	PA 8 XXX	180	43	36	100
14-2012	PA 8.5 XXX	160	37	38	100
14-2014	PA 9 XXX	155	39	41	90
14-2016	PA 9.5 XXX	140	36	43	90
14-2018	PA 10 XXX	135	39	46	80
14-2020	PA 10.5 XXX	125	38	49	80
14-2022	PA 11 XXX	115	35	51	80
14-2024	PA 12 XXX	115	37	55	70
14-2026	PA 12.5 XXX	105	32	55	80
14-2028	PA 13 XXX	100	32	57	70
14-2030	PA 14 XXX	90	35	66	61
14-2032	PA 14.5 XXX	90	30	62	70
14-2038	PA 17 XXX	80	32	71	61
14-3000	PA 10 GG	1920	64	4.25	500
14-3002	PA 12 GG	1800	61	4.5	500
14-3004	PA 14 GG	1560	61	5	450
14-3006	PA 15 GG	1450	62	5.5	400
14-3008	PA 16 GG	1320	56	6	400
14-3010	PA 17 GG	1250	56	6.5 x 5.75	400
14-3012	PA 18 GG	1170	55	6.5	400
14-3016	PA 20 GG	1030	57	7.5	325
14-3018	PA 22 GG	950	58	8	300
14-3020	PA 23 GG	900	56	8.3	300
14-3022	PA 24 GG	830	55	9	280
14-3024	PA 26 GG	790	54	9.5	280
14-3026	PA 27 GG	730	55	10.5	250
14-3028	PA 28 GG	700	54	10.75	250
14-3030	PA 30 GG	660	52	11	250
14-3032	PA 31 GG	630	51	11.5	250
14-3034	PA 32 GG	600	50	12	250
14-3036	PA 34 GG	560	51	13	225
14-3038	PA 36 GG	530	49	13.5	225
14-3040	PA 38 GG	500	47	14	225
14-3042	PA 40 GG	475	49	15	195
14-3044	PA 42 GG	440	46	16	195
14-3046	PA 44 GG	420	46	16.5	195
14-3048	PA 45 GG	400	46	17	195
14-3050	PA 47 GG	375	43	18	180
14-3052	PA 48 GG	365	43	18	155
14-3054	PA 50 GG	355	51	20	150
14-3056	PA 52 GG	335	49	21	150
14-3058	PA 54 GG	310	47	22	150
14-3062	PA 58 GG	300	46	23	140
14-3064	PA 60 GG	280	43	24	140
14-3066	PA 62 GG	270	41	24	150
14-3068	PA 64 GG	265	47	26	120
14-3070	PA 66 GG	255	46	27	120
14-3072	PA 68 GG	245	43	27.5	120
14-3074	PA 70 GG	240	44	28	120
14-3076	PA 72 GG	225	42	29	120
14-3078	PA 74 GG	212	40	30	120

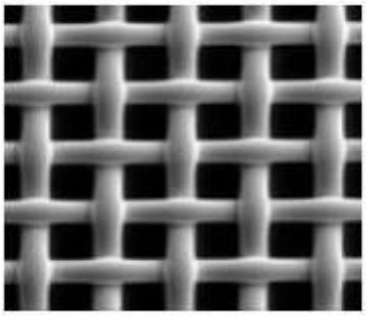

XXX

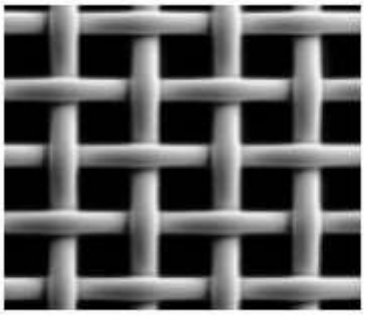

GG

Should the micron size or type of mesh you require not appear on this page, please contact us for details on other sizes available.

Meshes listed are Nylon. Polyester meshes or coloured meshes are available upon request.

filterfit engineered filtration solutions

Due to on-going product development, Filterfit reserves the right to change design and specifications without notice

Fabric weave information

Monofilament yarns create media with good cake discharge, high throughput and resistance to blinding

Multifilament yarns produce media with good filtration efficiency and high tensile strength

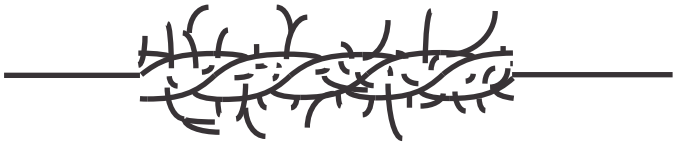

Staple spun yarns are used for high filtration efficiency and resistance to abrasion

Versatility can be created by a using a combination of yarn types and weaves

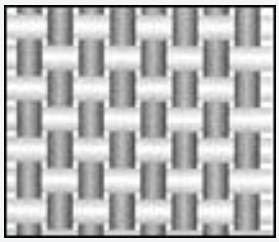

Plain weave produces a tight rigid structure and a high filtration efficiency

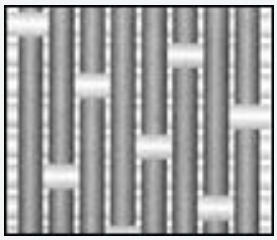

Satin weave creates a bulky media with good mechanical properties and flexibility

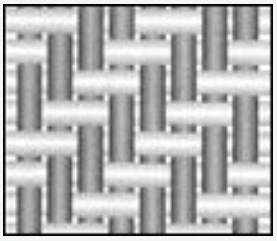

Twill weave creates a smooth release surface which is flexible and resistant to blinding

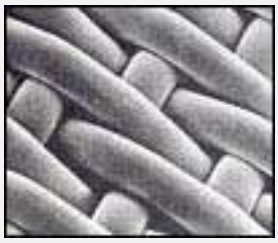

Filter fabrics with a so-called **long-mesh structure,** produced from monofilament yarns, have proved highly efficient for filtration due to their particularly smooth surface.

Filter fabrics made from **multifilament yarns** ensure a definable flow rate and reliable filter effect.

Filter fabrics made from **staple fibre yarns** provide a virtually closed surface and high separation efficiency on account of their voluminous structure.

Fibre properties

		Resistance to				
Fibre	Max. temp	Acids	Alkalis	Oxidising agents	Hydrolysis	pH range
Polypropylene	90 °C	Excellent	Excellent	Poor	Fair	0-14
Polyester	135 °C	Good	Poor	Fair	Poor	2-8
Polyamide (nylon)	110 °C	Poor	Good	Poor	Poor	4-14
PTFE (Teflon)	150 °C	Excellent	Excellent	Excellent	Excellent	1-14
PPS	150 °C	Excellent	Excellent	Fair	Excellent	0-14
PVC	80 °C	Excellent	Excellent	Fair	Excellent	0-14

filterfit engineered filtration solutions

Due to on-going product development, Filterfit reserves the right to change design and specifications without notice

Fabric performance selection guide

Yarn style	Flow rate	Particle retention	Cake release	Blinding resistance	Moisture retention	Abrasion Resistance
Monofilament	High	Low	High	High	Low	High
Multifilament	Low	High/Medium	Medium	Medium	Medium	Medium
Staple fibre	Medium	High/Medium	Low	Low	High	Medium
Weave Pattern						
Plain	Low	High	Medium	Low	Low	Low
Twill	Medium	Medium	Low	Medium	High	High
Satin	High	Low	High	High	Medium	Medium

Yarn/weave fabric style selection

Fabric combination	Suggested performance & benefits	
Woven Muitifilament	High particle retention efficiency, strength, cake release & dimensional stability	
Woven Monofilament - low permeability	Good particle retention efficiency, excellent cake release, blinding resistance & good washing properties	
Woven Monofilament - high permeability	High flow rate, good cake release, blinding resistance & good washing properties	
Woven Stable Fibre	Mechanical resistance, good retention efficiency, good sealing properties on filter presses	
Needlefelt - low permeability	High retention efficiency, durability, mechanical resistance & good sealing properties on filter presses	
Needlefelt - high permeability	High flow rate, good efficiency & durability	
Combination woven Multi/Monofilament	Good retention efficiency, durability, good cake release & blinding resistance	
Combination woven Multi/Staple fibre	Good retention efficiency, durability, good cake release & blinding resistance	
Equipment type	**Particle size**	**Suggested suitable fabric**
Plate & frame filter press	Fine	Woven Muitifilament, Woven staple fibre, Needlefelt-low perm, Combination woven
Plate & frame filter press	Course	Woven Monofilament - high perm, Woven staple fibre
Chamber filter press/Membrane press	Fine	Woven Muitifilament, Woven monofilament - Low perm, Woven staple fibre, Combination woven
Chamber filter press/Membrane press	Course	Woven Monofilament - high Perm, Combination Woven
Pressure Filter Belt		Woven Muitifilament, Combination woven
Rotary Vacuum Drum	Fine	Woven Monofilament - low perm, Woven Staple Fibre, Needlefelt - Low perm, Combination woven
Rotary Vacuum Drum	Course	Woven Monofilament - high perm, Woven Staple Fibre, Needlefelt - High Perm
Rotary Vacuum Filter Belt		Woven Muitifilament, Woven monofilament - High perm, Combination woven
Rotary Disc FIlter		Woven Monofilament - high Perm, Woven Staple Fibre, Combination Woven
Horizontal Belt filter	Fine	Woven Muitifilament, Woven Monofilament - Low perm, Needlefelt - Low perm
Horizontal Belt filter	Course	Woven Monofilament - high perm, Needlefelt - high perm, Combination woven
Centrifuge		Woven Muitifilament, Woven staple fibre

Due to on-going product development, Filterfit reserves the right to change design and specifications without notice

Technical data sheet

Resistance of fibres to various re-agents

Chemical	% Concentration	Temp °C	Nylon	Polyester	Polypropylene
Mineral acids					
Hydrochloric	34	20	D	G	E
Hydrofluoric	10	20	G	G	E
Nitric	66	20	D	G	F
Phosphoric	10	20	G	G	E
Sulphoric	96	70	D	D	P
Suphoric	50	70	D	G	G
Organic acids					
Formic	90	20	D	E	E
Acetic	100	20	G	G	E
Acetic	10	20	G	G	E
Oxalic	5	20	G	G	E
Benzole	3	100	P	G	G
Alkalis					
Sodium hydroxide	40	100	G	D	G
Sodium hydroxide	10	100	E	D	E
Sodium hydroxide	10	20	E	G	E
Sodium hydroxide	1	100	G	P	E
Sodium hydroxide	1	20	E	E	E
Potassium hydroxide	40	20	E	F	E
Ammonium hydroxide	30	20	E	P	E
Bleaching & reducing agents					
Hydrogen peroxide	3	70	E	E	F
Hydrogen peroxide	3	20	E	E	G
Hydrogen peroxide	0 - 5	70	E	E	E
Hydrogen peroxide	0 - 5	20	E	E	E
Sodium hypochiorite	10 pH	20	G	G	G
Sodium hypochiorite	10 pH	70	G	G	P
Organic solvents					
Acetone	100	20	G	G	E
Benzene	100	20	G	G	G
Trichlorethylene	100	20	G	G	F
Carbon tetrachloride	100	20	G	G	G
Methanol	100	20	G	G	E
Chloroform	100	20	G	G	F
Ether	100	20	G	G	F
Miscellaneous re-agents					
Formaldehyde	10	20	G	G	E
Benzaldehyde	100	20	G	G	-
Phenol	100	100	D	D	G
Phenol	5	20	P	G	E
Mineral oil	100	100	G	G	P
Olive oil	100	20	G	G	G
Agent					
Dry heat	-	150	F	E	P
Dry heat	-	100	G	E	F
Moist heat	-	150	F	F	P

Legend		
E	=	Excellent - recommended
G	=	Good - satisfactory
F	=	Fair - only to be used if no other material is satisfactory
P	=	Poor - not recommended
D	=	Dissolved -dissolved

filterfit
engineered filtration solutions

Due to on-going product development, Filterfit reserves the right to change design and specifications without notice

Liquid filtration glossary

Acidity:	The quantitative capacity of a liquid solution to react with an alkali.
Absorb/Absorption:	The process of fluids being taken into the pores of a solid.
Alkalinity:	The quantitative capacity of a liquid solution to react with an acid.
Backwash:	Flow reversed through a filter medium to remove filtered solids.
Blinding:	Fabric blockage by dust, fume, or liquid not being discharged by the cleaning process, resulting in a reduced flow with an increased pressure drop.
Cake:	Solids deposited on the filter media.
Cake filtration:	As a cake builds on the surface of a filter, the product itself becomes part of the filtration process.
Calendering:	The fabric is passed over a heated roller under many tonnes of pressure. The fabric surface is melted and smoothed to produce a surface glazed effect. Calendering provides for better cake release and reduces the permeability of fabric.
Centrifugation:	The process of separating two substances of differing densities by high speed spinning to create centrifugal force. Typically used to separate suspended particles from liquid.
Circumference:	The measurement around the outside of a filter bag
Clarification:	The filtration of liquids containing small quantities of solids.
Clarity:	The clearness of a liquid measured by the amount of contaminants remaining
Colloids:	Suspended submicron particles in a continuous fluid medium that will not settle out of the medium.
Depth filtration:	A process that entraps contaminants both within and on the surface of the filter media.
Diameter:	The measure across a filter bag, assuming its perfect circular state.
Efficiency:	The ability of the filter medium to remove particles from a fluid stream.
Effluent:	The outflow from types of treatment such as wastewater treatment plants. The fluid that is passed through a filter (also known as filtrate or product stream).
Emulsion:	A suspension of small liquid droplets within a second liquid that will not mix.
Heat setting:	The fabric is passed over a heated blanket. This relaxes the yarn in the fabric and makes it somewhat dimensionally stable in use. Dimensional stability is important so that fabrics resist changing shape (e.g. stretch) in use.
Flow rate:	The speed at which a liquid flows, measured in litres or gallons per minute. Flow rate of a liquid can be affected by the liquid's viscosity, differential pressure, temperature and/or the type of filter used.

Liquid filtration glossary

Impingement:	The direct effect of a particle or liquid upon a filter media.
Influent:	The stream of fluid entering the filter.
Lay flat:	The measurement across the width of a circular filter bag, flattened (equal to one half of the circumference)
Micron:	A unit of length equal to 1/1000 of one millimetre
P.H:	The measurement of the amount of acidity or alkalinity in a product. A P.H. of 7.0 is neutral, less than 7.0 is acidic, and more than 7.0 is alkaline.
Porosity:	A measure of the open area of a filter medium. Sometimes expressed as a void volume.
Pre-stretching:	A process whereby a fabric is pre-stretched in order to counteract filter belt lengthening when in use. Essential for large belt filter fabrics, it allows for good tracking when in use
Process filtration:	Filtration used as an active part of producing finished products.
Retention:	The ability of a filter to collect and retain particles from a gas or liquid, expressed as a percentage of particles originally present.
Singeing:	The fabric is passed quickly over a gas flame where the surface fibres are melted, resulting in a hard surface finish which aids cake release. Needlefelts are usually supplied singed as standard.
Specific gravity:	The ratio of the density of a substance to the density of a reference substance. For example the mass of a solid or liquid compared to the mass of an equal volume of distilled water.
Surface filtration:	Particles forming a cake on the surface of the filter media
Turbidity:	The measure of the amount of haze or cloudiness caused by fine particles in a fluid.
Turbidimetric efficiency:	The percentage reduction of haze or cloudiness in a fluid.
Vessel:	A container for filter cartridges or bags.
Viscosity:	The measure of the resistance to the flow of a liquid. Viscosity of a liquid varies with changes in temperature. Typically expressed in centipoise, centistoke or SSU values.

Due to on-going product development, Filterfit reserves the right to change design and specifications without notice

General industry terms

Calculations

Measurement	Conversion	Multiply by
Length	Inches to mm	25.4
	Inches to cm	2.54
	Yard to metre	0.9144
	Mile to km	1.609
	Lay flat to circumference	lay flat x 2
	Circumference to diameter	Circumference divided by 3.142 (pi)
	Diameter to circumference	Diameter x 3.142 (pi)
Area	$Inches^2$ to cm^2	6.4516
	$Foot^2$ to $Metre^2$	0.092903
	$Mile^2$ to km^2	2.589988
Volume	$Inches^3$ to cm^3	16.39
	Gallon(imperial) to Litres	4.5461
	Gallon (U.S) to Litres	3.7854
Flow (air)	CFM to Litres/sec	0.472
Flow (liquid)	GPM (Imperial) to Litres/sec	0.07571
	GPM (U.S) to Litres/sec	0.06308
Velocity	ft/sec to m/s	0.3048
	ft/min to m/s	0.00508
Pressure	PSI to Pa	6894.76
	PSI to kPa	6.895
	InH_2O to Pa	0.249
	Bar to PSI	14.5
	Bar to kPa	100
Weight	lbs to kgs	2.2
Power	Horse power to kW	0.746
Heat	BTU/hr to Watts	0.29307

Also available from Filterfit

As well as liquid filtration products detailed within this catalogue, Filterfit also manufactures and/or supplies a full range of HVAC filters for use within any application which requires air filtration.

Commercial buildings, hospitals and manufacturing plants, as well as a range of industrial and process filtration products and consumables both industry standard and non-standard, suitable for use in dust extraction, milling, pneumatic conveying or process air filtration.

Speak to your sales representative for more detailed information regarding your specific requirements or visit our website www.filterfit.com.au

Bulk air filter media rolls

Cut pads

Panel filters

Air filter bags

Mist eliminator

HEPA filters

Activated carbon filter

Rigid box filter

V cell

filterfit
engineered filtration solutions

Also available from Filterfit

Needlefelts

Monofilaments

Kevlar transitions

Flexible connectors /
Milling accessories

Sifter pads

Air slide for pneumatic
conveying or fluidising

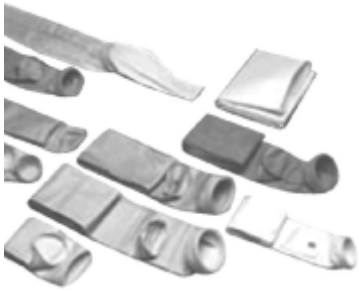

Dust collector bags

Pleated inlet filters

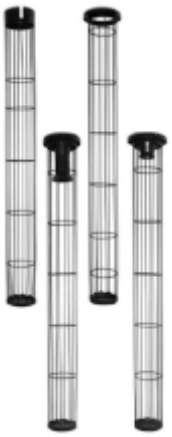

Dust collector cages

Dust collector components

- Solenoids
- Actuators
- Diaphragm valves
- Diaphragm kits
- Controllers
- Weather cowls
- Ducting

filterfit
engineered filtration solutions

filterfit
engineered filtration solutions

Filterfit P/L
A.B.N. 69 082 929 128
24 - 26 Japaddy Street
Mordialloc, 3195
VIC Australia

Postal address
P.O Box 1390
Moorabbin
Victoria 3189
Australia

Tel: (03) 9587-7330
Fax: (03) 9587-7320
Email: info@filterfit.com.au

Filterfit Queensland P/L
2/24 Violet Street
Hemmant, 4174
QLD Australia

Postal address
P.O. Box 7010
Hemmant
Queensland 4174
Australia

Tel: (07) 3890-8382
Fax: (07) 3890-8368
Email: infoqld@filterfit.com.au

Hours
Monday - Friday
8:30am - 5:00pm

We accept
Cash, bank cheques, EFT.
Accounts are available to approved customers on application.

Your local distributor is:

© Filterfit Pty. Ltd. 2014